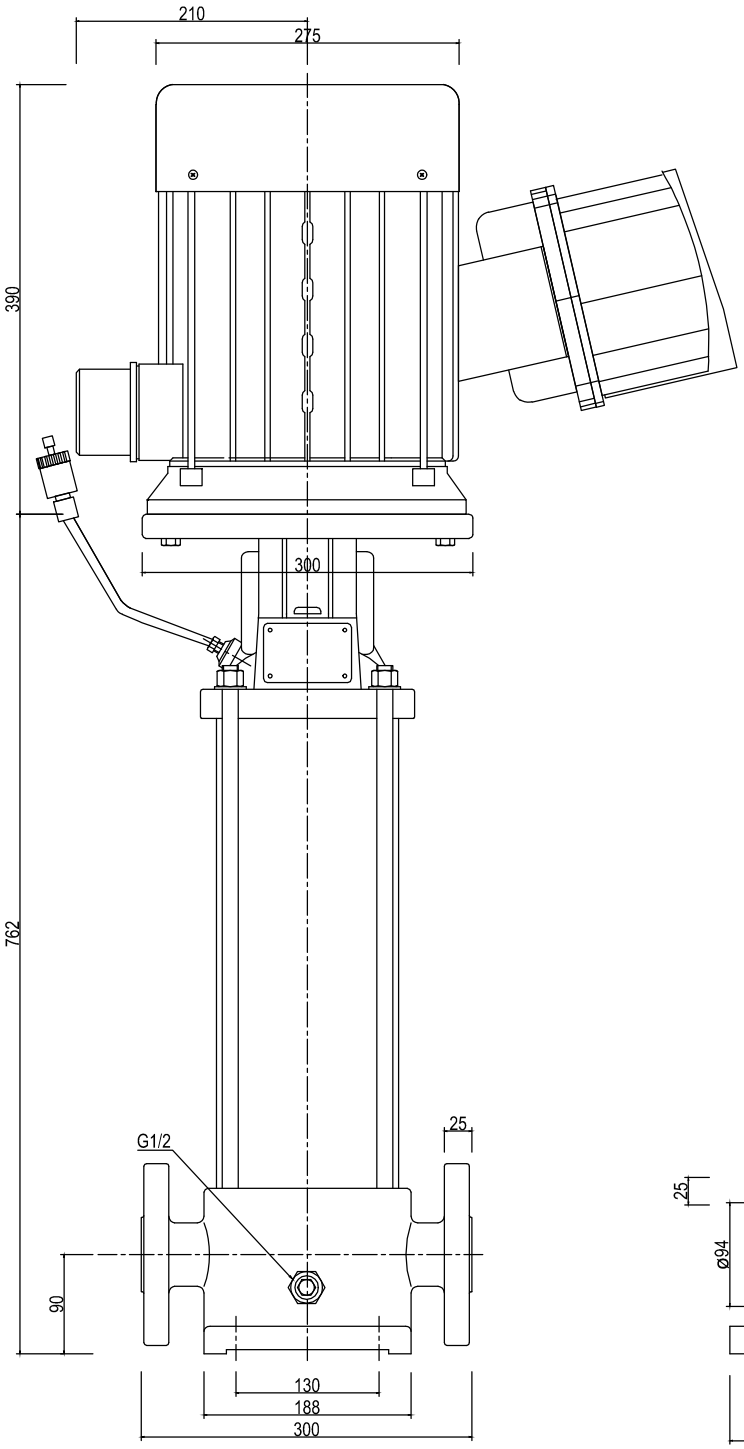

FGJ(DIN-ANSI-JIS)
PN16-25-40(DN50)
/mm/

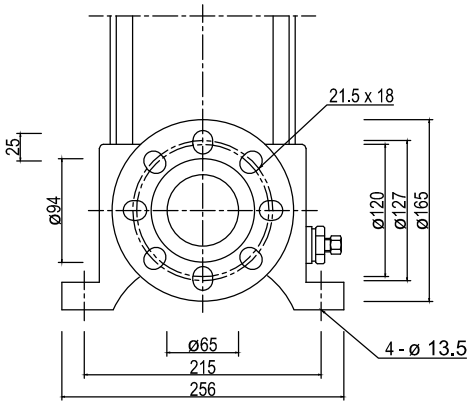

CVE 15-9		
PUMPS	07.07.2020	BAKALÁR PUMPS ®
Textilná 3/A		
040 12 Košice		